Product NO.	RHT-614-0196			
REV	DESCRIPTION	DWN	DATE	APPROVEN
A	First issue	Gavin	2018/03/12	JIM.KING

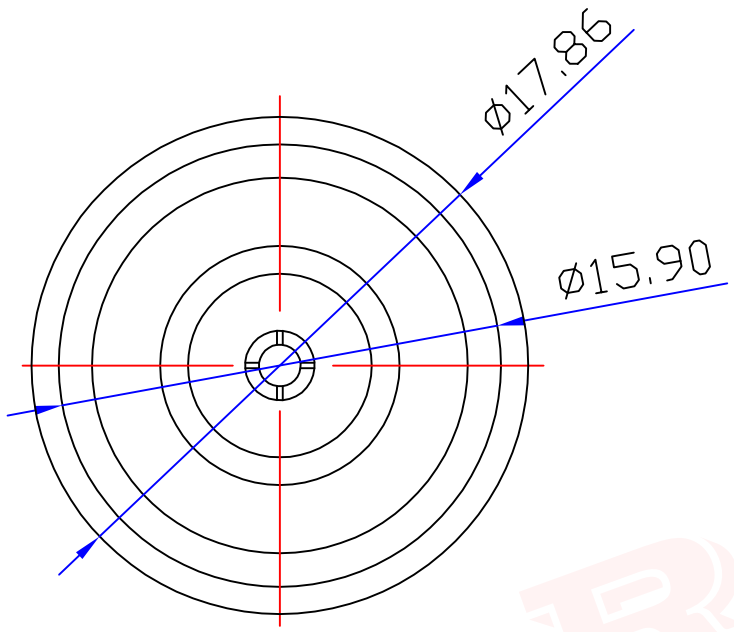

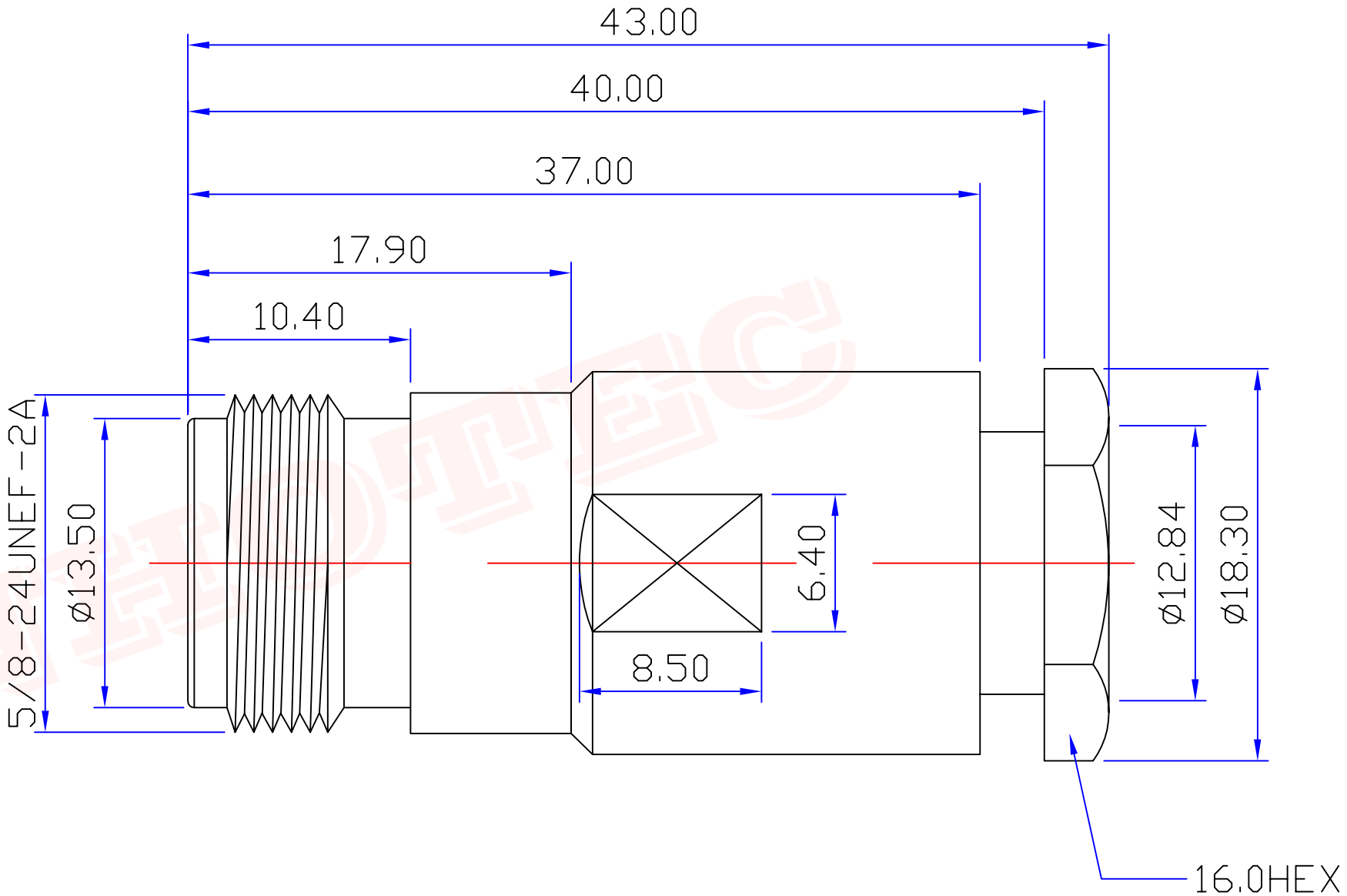

Specifications
Impedance: 50 Ohms
Frequency Range:0-11G
VSWR:1.3MAX
Working Voltage:1000 VRMS(max at sea level)
Dielectric Withstanding Voltage:1500 vrms(max at sea level)
Insulation Resistance:5000 Ohms min
Durability Mating:500 Cycles min
Temperature Range:-65℃ TO +165℃

NO	DESCRIPTION	MATERIAL	FINISH	QTY
3	PIN	BRASS	GOLD	1
2	INSUKATON	TEFLON	WHITE	1
1	BODY	BRASS	NICKEL	1

-TOLERANCES-
UNLESS OTHERWISE SPECIFIED

UNLESS OTHERWISE SPECIFIED TOLERANCES FOR MILLIMETERS ARE:
0.5 - 8mm ± 0.20mm
8 - 30mm ± 0.40mm
30 -120mm ± 0.50mm

RENHOTEC www.renhotec.com RENHOTEC GROUP

PART DESCRIPION: N JACK CONNECTORS

Appd: JIM.KING	P/N: RHT-614-0196				
Check:	Date	Scale	Unit	Type	Page
Draw: Gavin	2018/03/12	Free	MM	Z	1/1