Product NO.	DOSIN-807-0010			
REV	DESCRIPTION	DWN	DATE	APPROVEN
A	First issue	JIM	2010/02/03	John kine

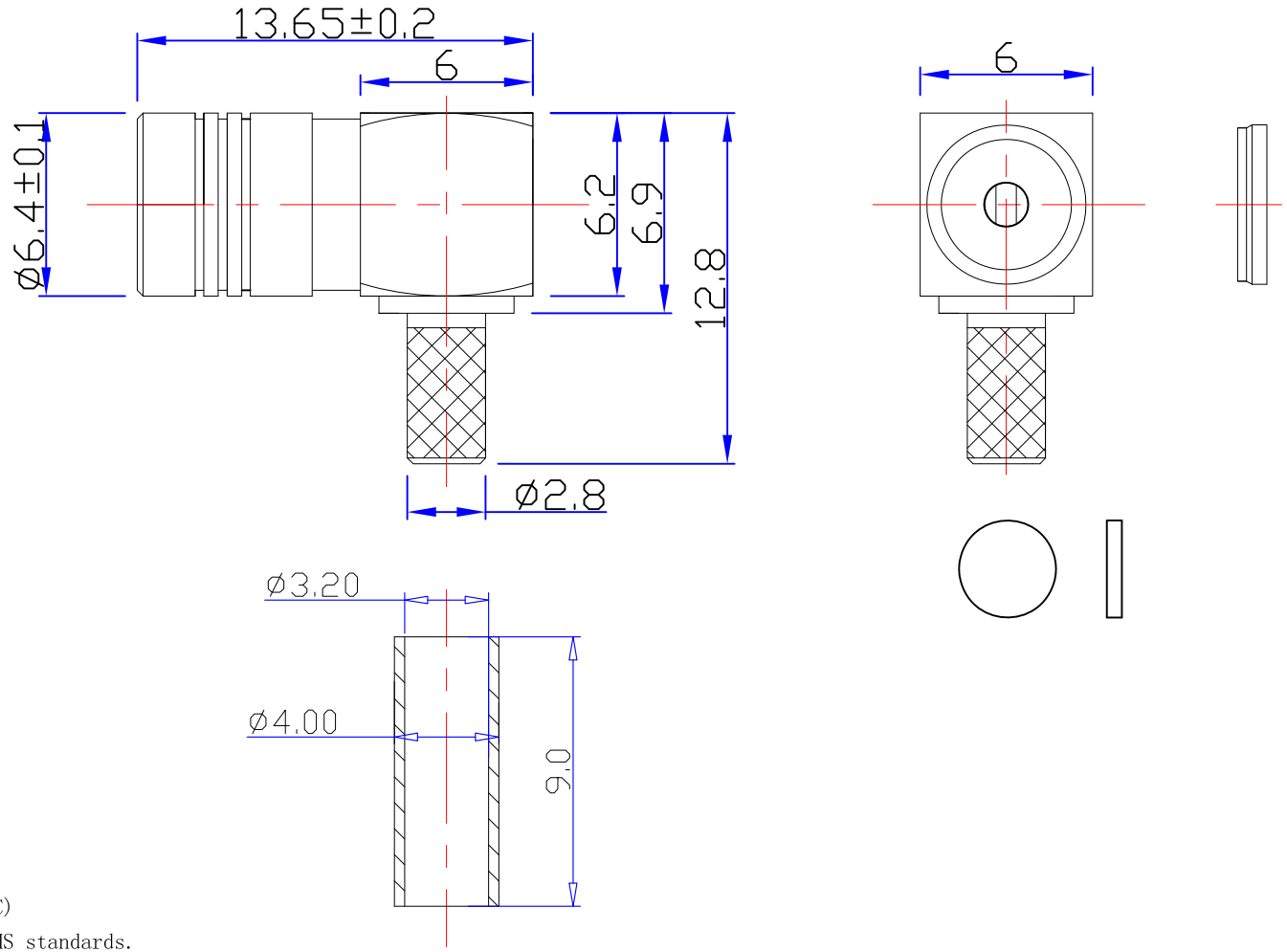

Specification:

VSWR:1.3MAX
Frequency range:DC~3G
Working Voltage:500V rms @ sea level
Insulation resistance:5000 Ohms min
Temperature range:-55℃ TO +155℃
Relative temperature:≤95%(40° C±2° C)
Drawings products are in line with ROHS standards.

NO	Component Number	Material	Finish	QTY
1	INSULATOR	PTFE	WHITE	1
2	CHMPING	BRASS	NICKEL	1
3	SHELL	BRASS	GOLD	1
4	PIN	BRASS	GOLD	1
5	BODY	BRASS	GOLD	1
6				
7				
8				
9				
10				

NOTE:

DRAWN	Zelin.Zhang	2012/04/10
CHECKED		
APPROVALS	John King	12/04.2012

Tolerance	0-6 ±0.2 6-30 ±0.3 30-120 ±0.5 Angular ±2°
View	
UNIT	MM
SCALE	1:1

DOSIN RF CONNECTOR
Dosin Industrial(H.K)Co.Ltd
东莞市德索五金电子制品有限公司
Dosin Hardware Electronics Co.,Ltd
E-mail:dosin2005@163.com
dosin2005@dosin-china.com
Web:http://www.china-guan.com
TEL:(0086)769-81153906
FAX:(0086)769-81875836

Name:	SMB CONNECTOR	
SIZE A	Product NO. DOSIN-807-0010	REV A
DateTime 2012/04/10	CAD FILE D/company drawings/BD	SHEET: 1 OF 1