Product NO.	DOSIN-809-0007			
REV	DESCRIPTION	DWN	DATE	APPROVEN
A	First issue	JIM	2012/11/02	John kine

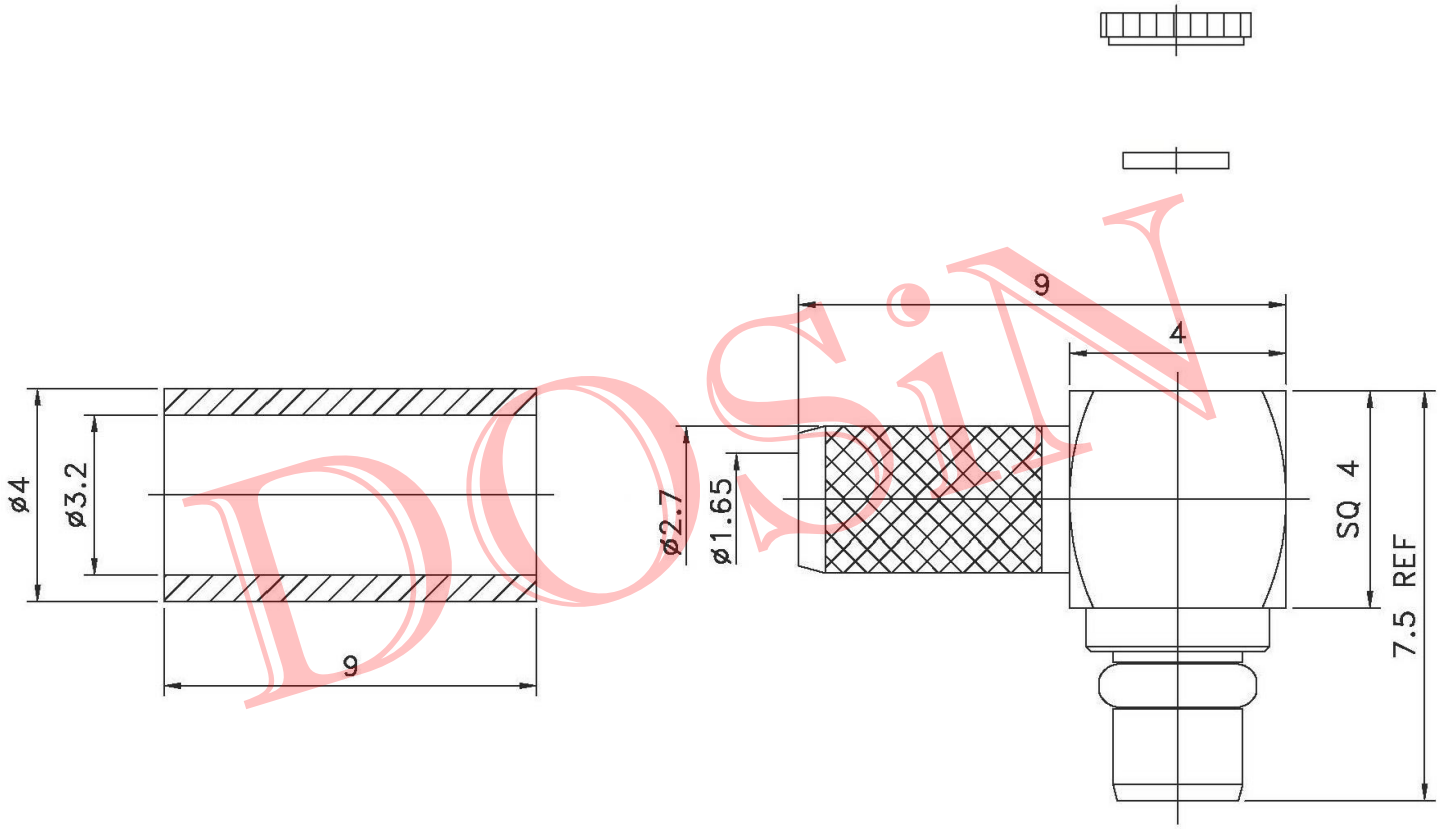

NO	DESCRIPTION	MATERIAL	FINISH	QTY
7	FERRULE	BRASS	GOLD	1
6	COVER	BRASS	GOLD	1
5	INSULATOR	TEFLON	NONE	1
4	BODY	BRASS	GOLD	1
3	LINK LOCK	BRASS	GOLD	1
2	INSULATOR	TEFLON	NONE	1
1	CENTER CONTACT	BRASS	GOLD	1

NOTE:

DRAWN Zelin. Zhang	2012/11/10	Tolerance	0-6 ±0.05 6-30 ±0.10 30-120 ±0.20 Angular ±2°
CHECKED		View	
APPROVALS John Kine	12/04.2012	UNIT	MM
		SCALE	1:1

DOSIN RF CONNECTOR
Dosin Industrial(H.K)Co.Ltd
东莞市德索五金电子制品有限公司
Dosin Hardware Electronics Co.,Ltd
E-mail:dosin20050163.com
dosin20050@dosin-china.com
Web:http://www.dosinconn.com
TEL:(0086)769-81153906
FAX:(0086)769-81875836

Name: MMCX CONNECTOR			
SIZE A	Product NO. DOSIN-809-0007		REV A
DateTime 2012/11/02	CAD FILE D/company drawings/BD		SHEET: 1 OF 1

DOSIN